EN40-N

NVIDIA® Jetson Orin
Edge AI Compact Fanless Embedded System



KEY FEATURES

Nvidia Edge AI engine
NVIDIA® Jetson Orin Nano™ or NX

Multi GbE ports with PoE
Four RJ45 GbE ports and optional 2x PoE

OOB Support
Optional OOB (out-of-band) support

Multiple Expansions
1 M.2 2230 E-Key, 1 M.2 2280 M-Key,
1 M.2 3042/3052 B-Key

Camera Connectivity
4x USB 3.2, 2x PoE(15W), 2x GMSL2

PANEL

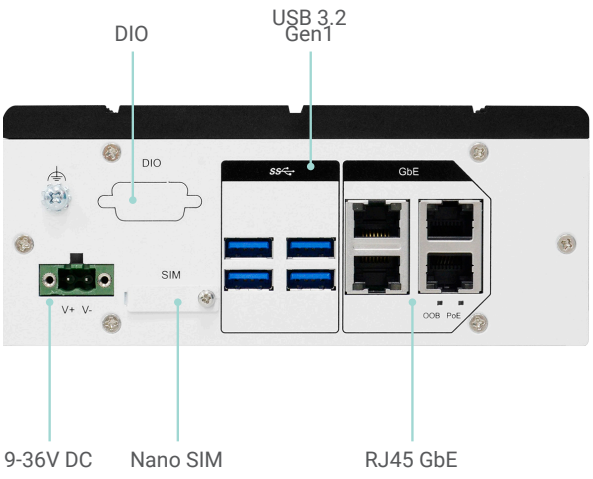

Front View

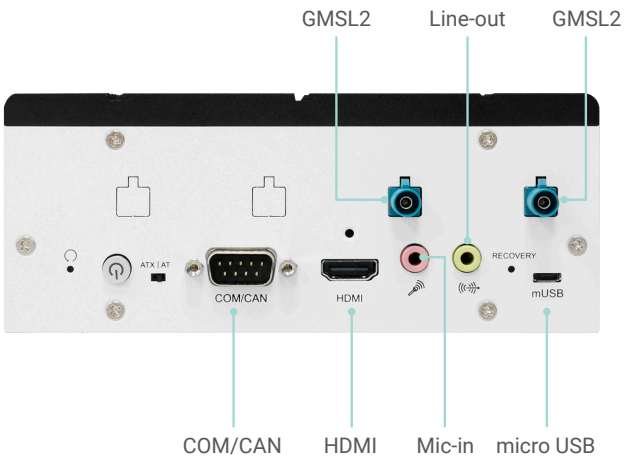

Rear View

DIMENSIONS

Rear View

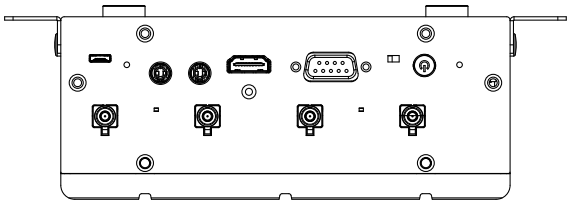

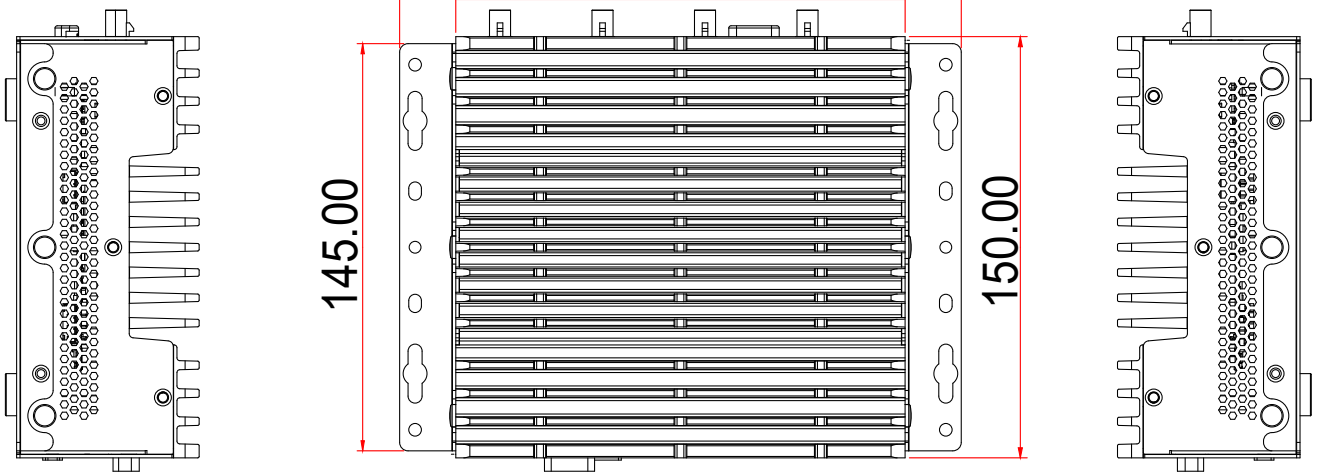

Left View

Right View

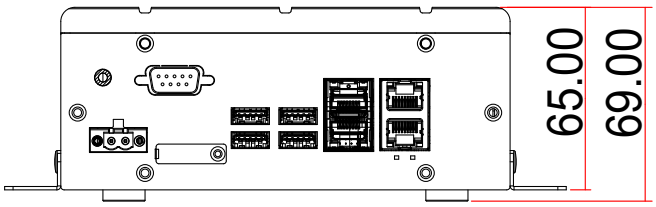

Front View

SPECIFICATION

SYSTEM	**SOM**	NVIDIA® Jetson Orin Nano™ 4GB, 7-10W NVIDIA® Jetson Orin Nano™ 8GB, 7-15W NVIDIA® Jetson Orin NX 8GB, 10-20W NVIDIA® Jetson Orin NX 16GB, 10-25W
	Processor	6/8-core Arm® Cortex®-A78AE v8.2 64-bit CPU
	GPU	1024-core NVIDIA Ampere architecture GPU with 32 Tensor Cores for Jetson Orin Nano™ 8GB and Orin NX 8/16GB, 40 TOPS 512-core NVIDIA Ampere architecture GPU with 16 Tensor Cores for Jetson Orin Nano™ 4GB, 20 TOPS
	Memory	8GB 128-bit LPDDR5 68 GB/s for Orin Nano™ 8GB 4GB 64-bit LPDDR5 34 GB/s for Orin Nano™ 4GB
		16GB 128-bit LPDDR5 102.4GB/s for Orin NX 16GB 8GB 128-bit LPDDR5 102.4GB for Orin NX 8GB
WATCHDOG TIMER	**Watchdog Timer**	Built-in NVIDIA® Jetson Orin™
GRAPHICS	**Display**	HDMI
STORAGE	**Internal**	M.2 2242/2280 M key (PCIe x4)
EXPANSION	**Onboard**	1 x M.2 Key E 2230 slot (USB 2 +PCIex1 signal) for Wi-Fi 6E 1 x M.2 Key B 3042/3052 slot (USB3 signal) for 5G/LTE with Nano SIM
ETHERNET	**Controller**	Four RJ45 GbE ports from 4x Intel i210 Supports 2x 15W PoE ports upon request
LED	**Indicators**	1 x PoE 1 x OOB
FRONT I/O	**Ethernet**	4 x RJ45 GbE connectors
	USB	4 x USB 3.2 Gen1 1 x micro USB for OS Flash
	SIM	accessible Nano SIM slot (covered by bracket)
	DC in	1 x 2-pin power terminal block
REAR I/O	**CAN bus/ COM**	1 x DB-9 for 1 RS232(Tx,Rx) and 1 CAN bus
	DIO	1 DB-9 for 4 DI/ 4 DO
	Audio	Mic-in, Line-out
	Display	1 x HDMI
	GMSL2	Fakra Z-code(male) x 2ch (4K30fps x1 / 1080p60fps x2 / 720p60fps x2)
Antenna	**Antenna**	6 x antenna holes
ON BOARD	**On board**	CPU fan header from EC Recovery switch for image update Reset button Power button
POWER	**Type**	9-36V DC
	Connector	1x 2-pin terminal block
	RTC Battery	CR2032
OS SUPPORT	**Linux**	Ubuntu 22.04
MECHANISM	**Mounting**	Wall mount (mounting brackets and screws) DIN mount by optional
	Dimensions (W x H x D)	Approx. 165 x 65 x 150 mm
	Weight	1.98kg
ENVIRONMENT	**Operating Temperature**	-20°C to 60°C
	Storage Temperature	-40°C to 85°C
	Relative Humidity	5 to 95% RH (non-condensing)
STANDARDS AND CERTIFICATIONS	**Shock**	**Operation** IEC 60068-2-27 Test Ea: Shock test Half-sine, 3G @ 11ms, 18 Shock ±X, ±Y, ±Z (each axis 3 times) **Non- Operation** IEC 60068-2-27 Test Ea: Shock test Half-sine, 5G @ 11ms, 18 Shock ±X, ±Y, ±Z (each axis 3 times)
	Vibration	**Operation** IEC 60068-2-64 Test Fh: Vibration board-band random test Random,2Grms @ 5~500 Hz, 30min. **Non- Operation** IEC 60068-2-6 Test Fc: Vibration Sinusoidal Test Sweep sine, 3Grms @ 10~500Hz, 30min.
	Certifciation	CE, FCC Class A, RoHS

ORDERING INFORMATION

Model Name	SOM	Memory	Display	USB	Ethernet	CAN bus/ COM/ DIO	Audio	Camera
X6-ORN-NN4	NVIDIA® Jetson Orin Nano™	4GB	HDMI	4 USB 3.2, micro USB	4 GbE	1 DB-9 CAN bus/Serial, 1 DIO	1 Mic-in, 1 Line-out	support 2x GMSL2
X6-ORN-NN8	NVIDIA® Jetson Orin Nano™	8GB						
X6-ORN-NX8	NVIDIA Jetson Oin NX	8GB						
X6-ORN-NX16	NVIDIA Jetson Oin NX	16GB						

DFI reserves the right to change the specifications at any time prior to the product's release. Changes thereafter will be based on the product's revision. Please contact your sales representative for the exact revision offered in your area. All product names mentioned are trademarks of their respective companies. © November 16, 2025 DFI Inc.